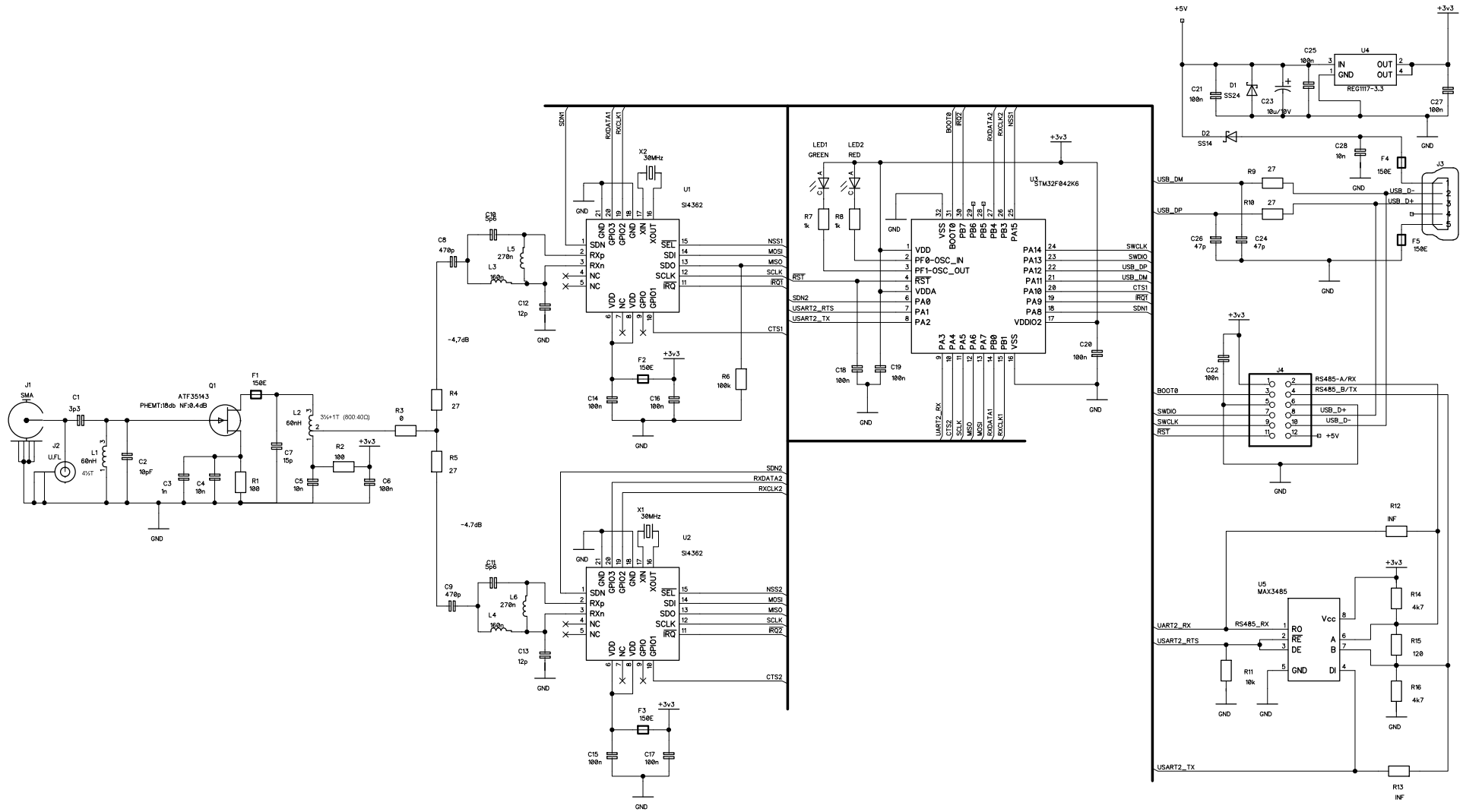

REVISIONS				
ZONE	REV	DESCRIPTION	DATE	APPROVED
1	1.0	Initial version 25-12-2014		

Itemref	Quantity	File name: uFlexDualAisRx1.0		Article No./Reference	
Designed by uFlex	Checked by	Approved by AGR date: 1-06-2015		Date 28-05-2015	Scale 2:1
uFlex		Dual Channel AIS Receiver			
				Edition 0	Sheet 1/1